Neosensor

Room CO_2 and Temperature Sensor

■ Overview

The CO_2 and temperature sensor (Model CY7101), a product of Neosensor series, detects CO_2 concentration and temperature in a room.
This sensor is suitable for monitoring CO_2 concentration and temperature in a room.

■ Features

(1) Wide CO_2 concentration and/or temperature sensing rage with high accuracy
(2) CO_2 concentration is sensed by the non-dispersive infrared absorption method.
Pt100 RTD*, conforming to JIS* C 1604 Class A, is used for sensing temperature.
(3) Linear output signal in 1–5 V DC range for CO_2 concentration
(4) Excellent long-term stability
(5) High environmental resistance
(6) Quick responsiveness and high repeatability
(7) Compact (thin) and lightweight
(8) CE marking certified product
This product conforms to the standards for CE marking.

* RTD: resistance temperature detector
* JIS: Japanese Industrial Standards

IMPORTANT
- In a system where harmful chemical substances or viral pathogens, etc., are handled, do not limit outdoor air intake using this product or other CO_2 measuring instruments.
  It is dangerous to limit fresh outdoor air intake in such systems where fresh air is continuously required.
- The main unit is packaged for shipment after inspection and calibration.
  To minimize the output drift that may occur after its installation, it should be unpacked and mounted just before the power is supplied (approximately within 48 hours).
  If the main unit has been continuously non-energized (since it is unpacked till it is activated, or since it is shut down) for 48 hours or over, be sure to conduct the CO_2 zero gas calibration (refer to ■ *Maintenance*) after the power is supplied.
- This product detects CO_2 concentration by the NDIR method, so it periodically emits light.
  Avoid using it in a room where should be kept dark.

Safety Precautions

Please read instructions carefully and use the product as specified in this manual.
Be sure to keep this manual nearby for quick reference.

Restrictions on Use

This product was developed, designed, and manufactured for general air conditioning use.

Do not use the product in a situation where human life may be at risk or for nuclear applications in radiation-controlled areas. If you wish to use the product in a radiation-controlled area, please contact Azbil Corporation.

Particularly when the product is used in applications like the following where safety is especially required, implementation of fail-safe design, redundant design, regular maintenance, etc., should receive appropriate consideration so that the product can be used safely and reliably.

- Safety devices for protecting the human body
- Start/stop control devices for transportation machines
- Aeronautical/aerospace machines

For system design, application design, instructions for use, or product applications, please contact Azbil Corporation. Azbil Corporation bears no responsibility for any result, or lack of result, deriving from the customer's use of the product.

Recommended Design Life (Recommended Period of Use)

It is recommended that this product be used within its design life. The design life is the period during which you can use the product safely and reliably based on the design specifications. If the product is used beyond this period, its failure ratio may increase due to time-related deterioration of parts, etc.

The design life during which the product can operate reliably with the lowest failure ratio and least deterioration over time is estimated scientifically based on acceleration tests,endurance tests, etc., taking into consideration the operating environment, conditions, and frequency of use as basic parameters.

The design life of this product is 10 years.

The design life specified for this product assumes that maintenance, such as replacement of the limited-life parts, is carried out properly. Refer to the section on maintenance in this manual.

■ Cautions

⚠CAUTION	Alerts users that improper handling may cause minor injury or material loss.

■ Symbols

⃠	Notifies users that specific actions are prohibited to prevent possible danger. The symbol inside ⃠ graphically indicates the prohibited action. (For example, the sign on the left means that disassembly is prohibited.)
❗	Instructs users to carry out a specific obligatory action to prevent possible danger. The symbol inside ● graphically indicates the actual action to be carried out. (For example, the sign on the left indicates general instructions.)

⚠CAUTION	
❗	Take anti-lightning surge measures based on regional and building characteristics. Lightning may cause fire or critical damage to this product if protective measures are not taken.
❗	Provide a circuit protector (e.g., a fuse or circuit breaker) for the power source. Failure to do so may cause a short circuit leading to fire or device failure.
❗	Install, wire, and use this product under the conditions specified by this manual. Failure to do so may cause fire or device failure.
❗	Installation, wiring, and maintenance must be performed by personnel qualified to do instrumentation and electrical work. Otherwise there is a danger of fire or electric shock.
❗	Before wiring or maintenance, turn off the power to this product. Failure to do so may result in electric shock or device failure.
❗	All wiring must comply with applicable codes and ordinances. Otherwise there is a danger of fire.
❗	To connect the wires to the product, use crimp terminal lugs with insulation. Failure to do so may cause short circuit leading to fire or device failure.
❗	After wiring or maintenance work, reattach the cover. Failure to do so may result in electric shock

■ Model Numbers

Base model number	Type	Power supply	CO_2 concentration output	Temp. output	Fixed	Output wiring	Company logo	Description
CY710								Room CO_2 concentration sensor
	1							Neosensor
		T						24 V DC, 24 V AC
			1					CO_2 concentration output 1–5 V
				P				RTD (Pt100)
					0			————
						1		Modular jack connection
								With company logo
							-1	Without company logo

● Parts ordered separately

A Neosensor is used with the dedicated mounting kits ordered separately, auxiliary devices, etc.

Item		Model number	Remarks	
Dedicated mounting kit	Wall-direct mounting kit	83165803-001		
Auxiliary device	Thermoplate for open wiring	DY2000A1021	For 1 sensor, square type	Thermoplate for open wiring is used for open wiring installation.
		DY2000A2021	For 2 sensors, crosswise type	
		DY2000A3021	For 3 sensors, crosswise type	
Modular cable		DY7227A0020	Standard model	
		DY7227C0020	Ecological model	
CO_2 service bag (CO_2 zero gas supply kit)		83104511-001	Used for zero gas calibration	
CO_2 service cylinder		83104981-001		

● Dedicated mounting kit

Mounting method	Mounting kit (model number)	Contents
Mounting directly on wall	Wall-direct mounting kit (Model No.: 83165803-001)	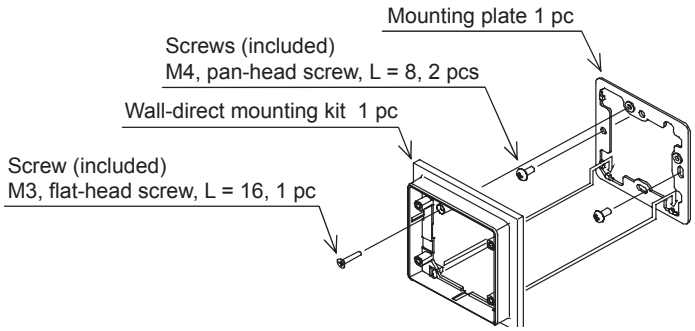
Mounting onto Thermoplate for open wiring		

■ Specifications

Item		Specification	
Measuring range	Temperature	0–50 °C	
	CO_2 concentration	0–2000 ppm	
Measuring method	CO_2 concentration	Non-dispersive infrared absorption method (NDIR)	
Output signal	Temperature	100 Ω / 0 °C RTD (Pt100), conforming to JIS C 1604 Class A	
	CO_2 concentration	1–5 V DC - Linearly detectable in 0–2000 ppm range - Input impedance of connected controller: min. 50 kΩ	
Accuracy	Temperature	0.6 °C ± 0.7 °C (in 0–50 °C environment) - Including heat generated by the circuit: 0.6 °C, sensor element error: ± 0.3 °C, air speed influence: ± 0.4 °C	
	CO_2 concentration	CO_2 concentration measurement	± (50 ppm + 5 % of measured value)
		Output resolution	10 mV
Drift in CO_2 concentration measurement		Continuously ON operation: ± 150 ppm/year (@ 1000 ppm) Continuously OFF (ref. value): ± 15 ppm/48-hour in 50 % RH environment	
Initial stabilizing time for CO_2 concentration measurement		After continuously OFF for 48 hours or more, approx. 10 days (excluding just after the product is unpacked) Other than above, approx. 3 days	
Time constant (ref. value)	Temperature	8.5 min or less (ambient air velocity at 0.15 m/s)	
	CO_2 concentration	3 min or less (in diffused conditions)	
Power voltage		24 V AC -15 % to +10 % (50/60 Hz)	
		24 V DC ± 10 %	
Power consumption	24 V AC	Max. 3.0 VA	
	24 V DC	Max. 2.0 W	
Insulation resistance		500 V DC, 20 MΩ or more	
Withstand voltage	500 V AC	Voltage applied for 1 min, max. 1 mA leakage current (between housing and terminals)	
Environment conditions		Rated operating conditions	Transportation/storage conditions (in packaged state)
	Ambient temperature	0–50 °C	-20–70 °C
	Ambient humidity	0–85 % RH (without condensation)	5–95 % RH
Color		Pale gray	
Materials	Cover	PC resin	
	Base	Modified PPE* resin	
Weight		Approx. 80 g	
Installation		With the mounting kit (sold separately)	
Connection		Modular jack	
Accessory		Main unit mounting screws (M3, 16 mm): 4 pcs	

* PPE: polyphenylether

■ Dimensions

● Neosensor with Wall-direct Mounting Kit

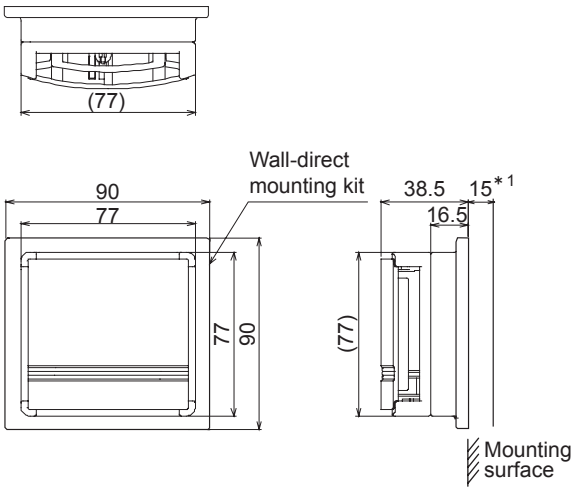

Figure 1. Neosensor dimensions (mm)

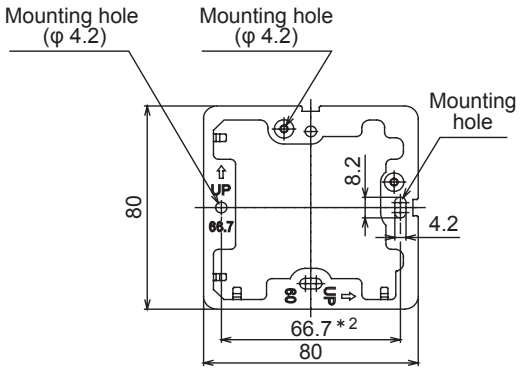

Figure 2. Mounting plate dimensions (mm)

*1 For wiring, secure more than 15 mm clearance inside the mounting surface.

*2 Use JIS outlet box/box cover (JIS C8340:1999) with 66.7 mm mounting dimension.

■ Installation

⚠CAUTION	
!	Install and use this product according to the specifications stated in this manual. Failure to do so may cause fire or device failure.
!	Installation must be performed by personnel qualified to do instrumentation and electrical work. Otherwise there is a danger of fire or electric shock.

● Handling of the main unit

- The main unit is packaged in a tightly sealed aluminum moisture-proof bag for shipment.
  This prevents large output drift that may be caused by absorption of moisture into the main unit when it is continuously non-energized. Table 1 shows the output drift (reference value) after the main unit has been left without power supply. Note that output drift of the main unit continuously energized is ±150 ppm/year.

Table 1. Output drift of the main unit continuously non-energized (reference value)

Humidity (% RH)	Non-energized period			
	to 6 hours	to 12 hours	to 24 hours	to 48 hours
30	< ±10 ppm drift			
50	< ±10 ppm drift			< ±15 ppm drift
80	< ±10 ppm drift	< ±15 ppm drift		< ±25 ppm drift

- The main unit is packaged for shipment after inspection and calibration.
  To minimize the output drift that may occur after its installation, it should be unpacked and mounted just before the power is supplied (approximately within 48 hours).
  If the main unit has been continuously non-energized (since it is unpacked till it is activated, or since it is shut down) for 48 hours or over, be sure to conduct the CO_2 zero gas calibration after the power is supplied.

Note: For the zero gas calibration, refer to ■ *Maintenance.*

● Installation location

IMPORTANT
- Installation location of Neosensor largely affects temperature/humidity control.
  Carefully select the location.
- Chemical (organic solvent) atmosphere may shift the output values.
- Corrosive gas, organic solvent, and other chemicals contained in the atmosphere can cause measuring error of Neosensor, shorten the service life of Neosensor, or damage Neosensor.
  Ask our salesperson for use of Neosensor in a special application, as mentioned above.

Install Neosensor on an indoor wall where:
- Representative temperature and humidity (of the room/zone to control) are measured (approx. 1.5 m high above the floor).
- Ambient air velocity is 0.1–0.15 m/s.
- There is enough maintenance space left in front of Neosensor.

● Prohibited installation location

Do not install Neosensor on a wall where
- Heat (generated by office device or equipment, for example) stays on.
- Air circulation is interfered (by furniture or door, for example).
- Temperature and/or humidity sensing is affected by draft, downdraft, and hot/cold air from water pipes/ducts.
- Temperature and/or humidity sensing is affected by weather conditions (including sunlight and outdoor air).
- There is vibration.
- Dew condensation occurs.
- Water drops.
- Corrosive gas, organic solvent, or other chemicals is contained in the atmosphere.
- Do not install Neosensor outdoors or in a duct.
- Do not horizontally install Neosensor directly on a ceiling surface.

● Precautions for installation

- Install Neosensor with a dedicated mounting kit (sold separately) suitable for your application.
- Do not allow any refuse such as an electric wire scrap to get inside Neosensor.
- Do not get a cable caught between the Neosensor main unit and the mounting surface.
- When the cover is removed, carefully handle Neosensor not to damage the temperature sensing element.
- Check that the ambient air velocity is sufficient in a location (not on a ceiling surface) where Neosensor will be horizontally installed.
- If air infiltrates to the rear side of the Neosensor from the inside of the installed wall through the outlet box, shut off the air by sealing the outlet box.
- After installation, leave Neosensor well so that it adapts to ambient conditions (atmospheric environment).

● Cover removal

IMPORTANT
- Do not touch the temperature sensing element on the PCB* assembly when removing/attaching the cover and when installing the main unit.
  Also, do not bend the temperature sensing element attached on the PCB assembly. Measuring accuracy may drop.

* PCB: printed circuit board

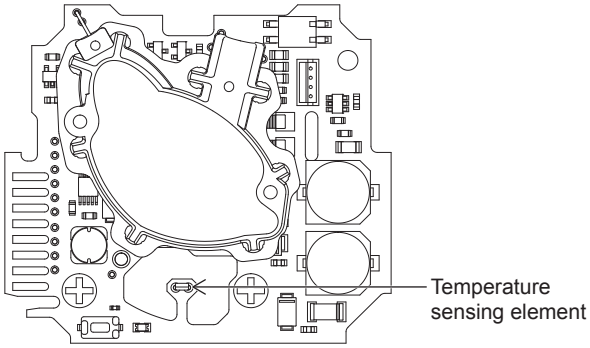

Figure 3. PCB assembly

- Removing the cover
  Press the spring, located inside the top of the Neosensor main unit, using a thin object.
- Attaching the cover
  Engage the tabs located on the lower part of the cover with the slots on the lower part of the main unit. Then fix the cover with the spring, located on the top of the Neosensor main unit.

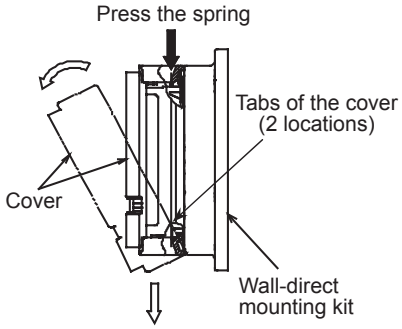

Figure 4. Cover removal

● Installation procedure

<< Neosensor directly on a wall >>

(1) Attach the mounting plate of the Wall-direct mounting kit to the outlet box cover (JIS C8340:1999 Boxes and box covers for rigid metal conduits (mounting dimension: 66.7 mm)) on the mounting surface.
(2) Attach the main unit of the Wall-direct mounting kit to the mounting plate. (See Figure 7.)
(3) Connect the modular cable of Neosensor with the cable from the load.
(4) Connect the modular cable to the main unit.
(5) Remove the cover from the main unit as shown in Figure 4.
(6) Set the depth change levers on the bilateral sides of the main unit to the upper position (indicated with "L" shown in Figure 10).
(7) Mount the main unit of Neosensor on the main unit of the Wall-direct mounting kit with four mounting screws (M3, L = 16) supplied with Neosensor.
(8) Attach the cover back to the main unit and complete the installation (See Figure 4).

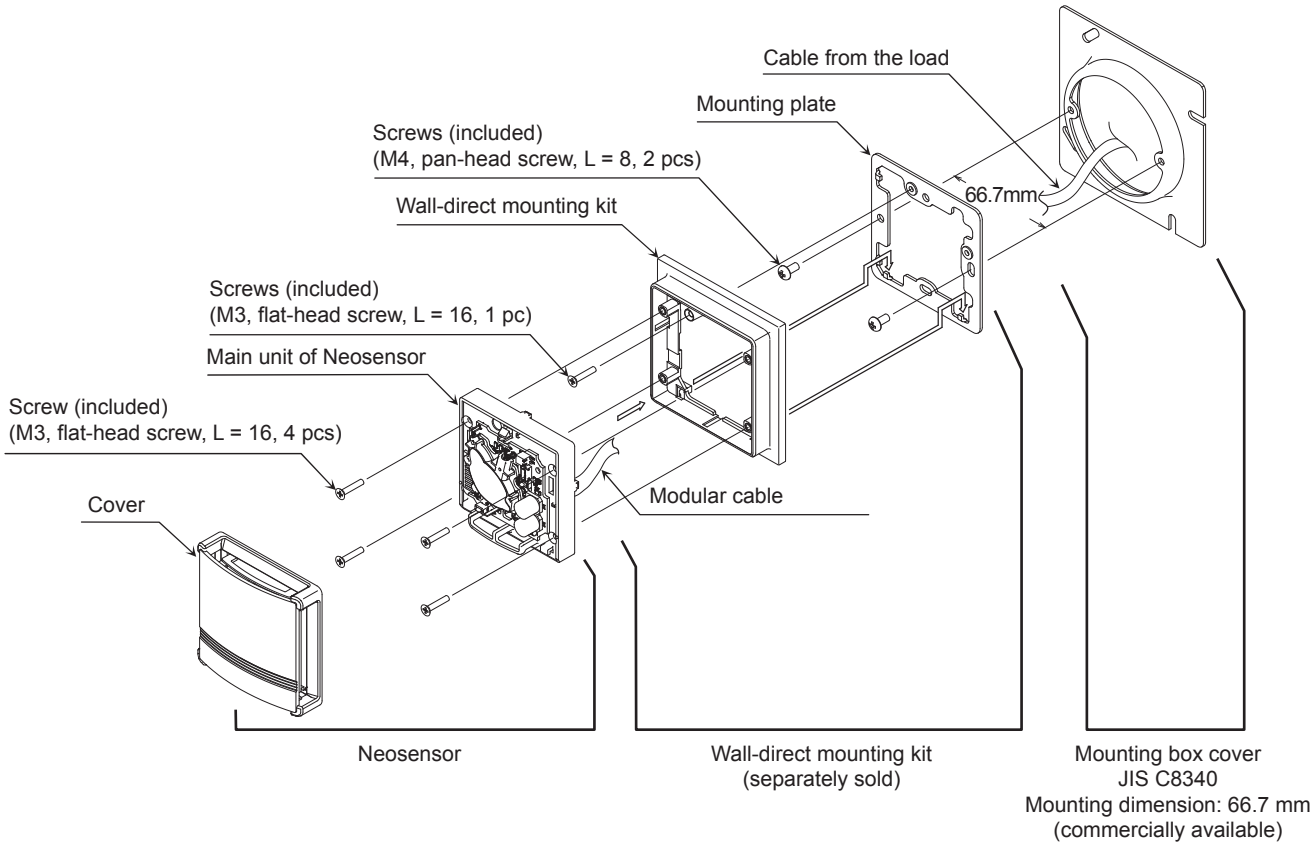

Figure 5. Installation procedure, Neosensor with Wall-direct mounting kit

<< Neosensor on Thermoplate for open wiring >>

(1) Attach mounting plate of the Wall-direct mounting kit to Thermoplate for connecting to pipe.
(2) Attach the main unit of the Wall-direct mounting kit to the mounting plate. (See Fugure 7.)
(3) Connect the modular cable of Neosensor with the cable from the load.
(4) Connect the modular cable to the main unit.
(5) Remove the cover from the main unit as shown in Figure 4.
(6) Set the depth change levers on the bilateral sides of the main unit to the upper position (indicated with "L" shown in Figure 10).
(7) Mount the main unit of Neosensor on the main unit of the Wall-direct mounting kit with four mounting screws (M3, L = 16) supplied with Neosensor.
(8) Attach the cover back to the main unit and complete the installation (See Figure 4).

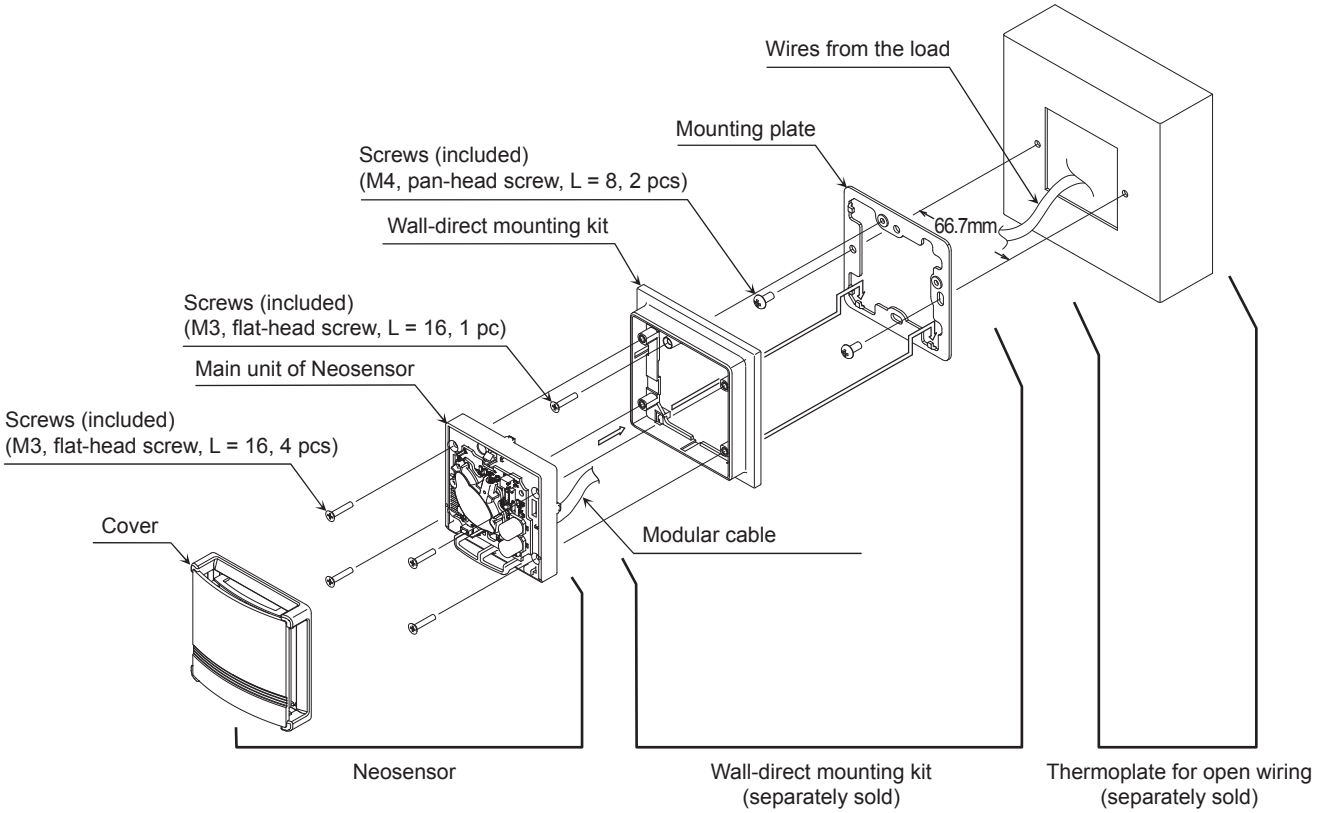

Figure 6. Installation procedure, Neosensor with Thermoplate mounting kit

Assembling the Wall-direct mounting kit

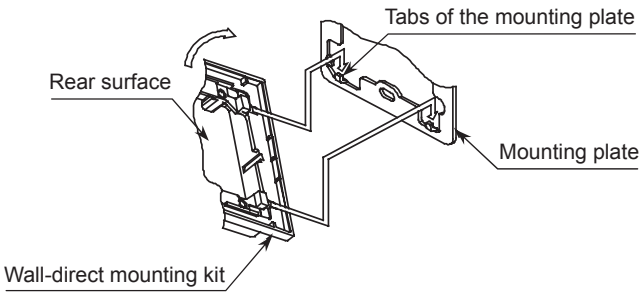

Figure 7. Assembling the Wall-direct mounting kit

- **Protection form heat radiation and conduction**

  To protect the measuring accuracy from disturbances, change the the distance between the Neosensor sensing element and the mounting surface as described below.

  (1) Remove four mounting screws of Neosensor.

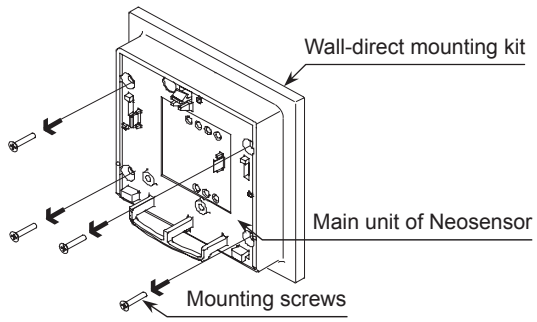

Figure 8.

  (2) Raise the Neosensor main unit from the Wall-direct mounting kit. 9 mm max. can be raised.

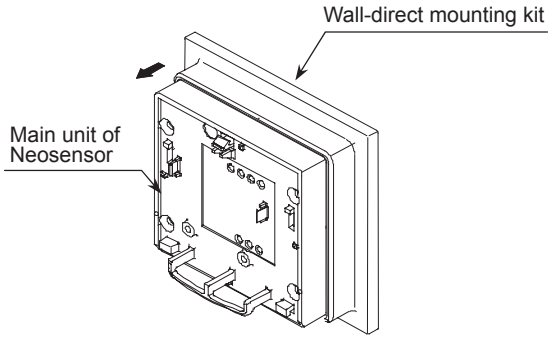

Figure 9.

  (3) Set the depth change levers, located on the bilateral sides on the main unit front surface, at the lower position.

  Note: The levers are factory-set at the upper "L" position.

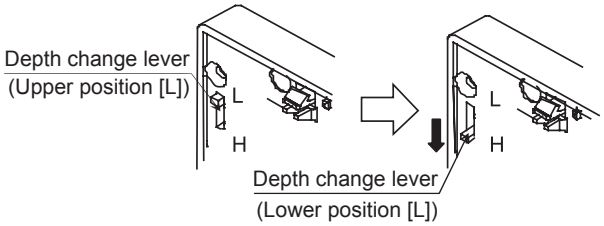

Figure 10.

  (4) Fix the raised Neosensor main unit to the Wall-direct mounting kit with four mounting screws.

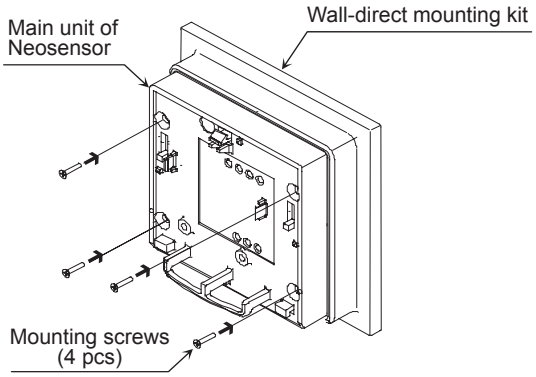

Figure 11.

  Check that the main unit is raised from the wall as shown in Figure 12.

  Note: Effect of raised Neosensor varies depending on its installation environment.

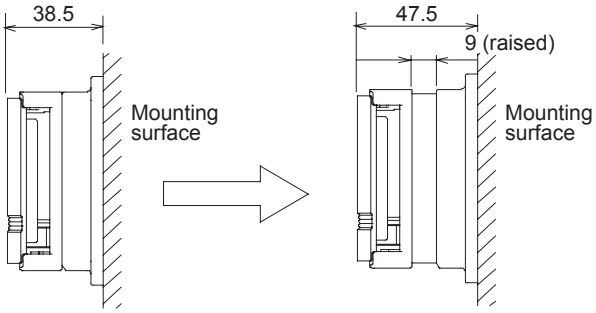

Figure 12.

■ Wiring

⚠CAUTION	
❗	Wire and use this product under the conditions specified by this manual. Failure to do so may cause fire or device failure.
❗	Wiring must be performed by personnel qualified to do instrumentation and electrical work. Otherwise there is a danger of fire or electric shock.
❗	Before wiring, turn off the power to this product. Failure to do so may result in electric shock or device failure.
❗	All wiring must comply with applicable codes and ordinances. Otherwise there is a danger of fire.

IMPORTANT
- Separate cables must be used for signal transmission of this sensor and for power supply of another device.

● Modular connection

Connect the modular cable to the modular jack on the Neosensor main unit. Then connect the modular cable with the lead wires from the controller using the closed-end connectors (7 pcs).

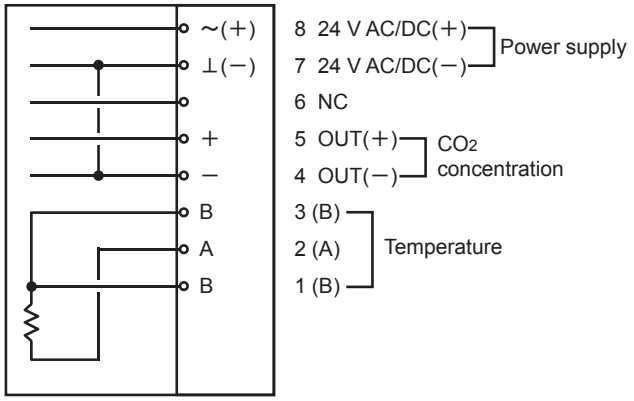

Figure 13. Internal circuits

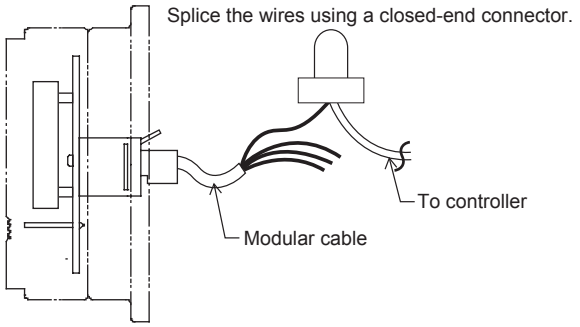

Figure 14. Modular jack connection

● Precautions for wiring

IMPORTANT
- If more than the rated voltage is accidentally applied to this product, replace the product with a new one for safety.
- Do not connect the temperature output wires to the power supply.
  Doing so might generate smoke or cause burnout. Make sure all the wires are correctly connected before supplying power.
- Do not connect the 24 V AC transformer to any other device in addition to Neosensor.
- To connect Neosensor with a controller that has common mode analog inputs, separate 24 V AC power is required for Neosensor from the controller.

- For wiring the temperature output and the CO_2 concentration output signal, 1.25 mm^2 or greater shielded multi-core cables (CVV-S) are recommended.
- For wiring the power supply and the temperature output signal, also 1.25 mm^2 or greater IV cables can be used.
- Be sure to ground the shielding on the controller side.
- The maximum cable length is 50 m.
- For the wiring, refer to the specifications and instructions of the controllers to which Neosensor is connected.

● Power supply wiring

⚠CAUTION	
❗	To connect the wires to the product, use crimp terminal lugs with insulation. Failure to do so may cause short circuit leading to fire or device failure.

Connect this product as described below.

(1) Remove the cover.
(2) Connect this product to the controller as shown in "Connection example."
(3) Reattach the cover.

⚠CAUTION	
❗	After wiring, reattach the cover. Failure to do so may result in electric shock.

• Wiring example

<< Connecting to controller >>

• DC power supply

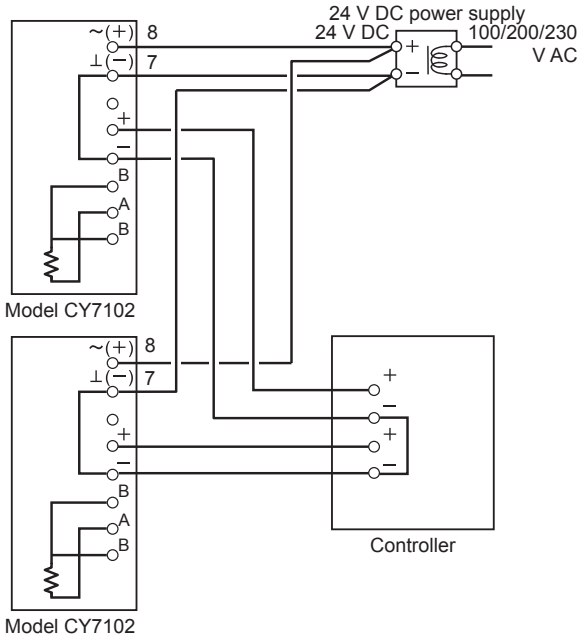

Figure 15.

IMPORTANT • 24 V DC power supply can be shared among multiple Neosensors and controllers.
Be sure to wire 24 V DC (+) to the terminal 8 of the sensors and 24 V DC (-) to the terminal 7 of the sensors as shown in Figure 15.

• AC transformer (24 V AC power supply)

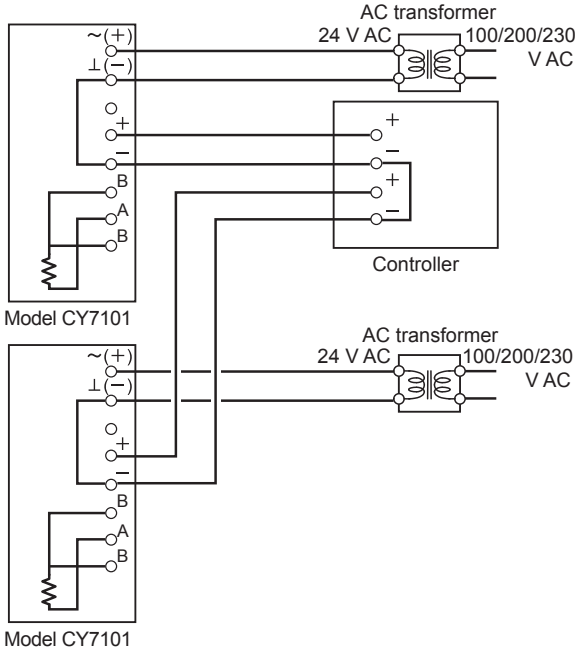

Figure 16.

To supply power to Neosensor through AC transformer (24 V AC power supply), be sure to follow the instructions below.

IMPORTANT • Use an isolated transformer to supply 24 V AC power.
To connect Neosensor with a controller that has common mode analog inputs, separate 24 V AC power is required for Neosensor from the controller. If multiple devices are powered by a single power supply (transformer), the common wiring will form a loop and the product will get damaged. So do not share the power supply with other devices.

If the AC transformer (24 V AC power supply) is shared by two Neosensors, a loop will be made in the circuit and Neosensors may fail.

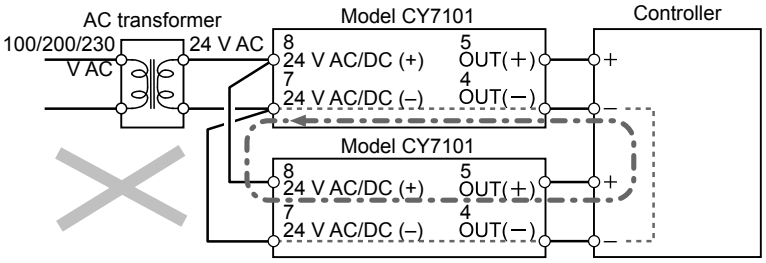

Figure 17. A loop is made in the circuit

If the AC transformer (24 V AC power supply) is shared by two Neosensors and wires are connected wrongly between terminals 7 and 8 as shown in Figure 18, a short circuit is made in Neosensor through the common loop and Neosensors may fail.

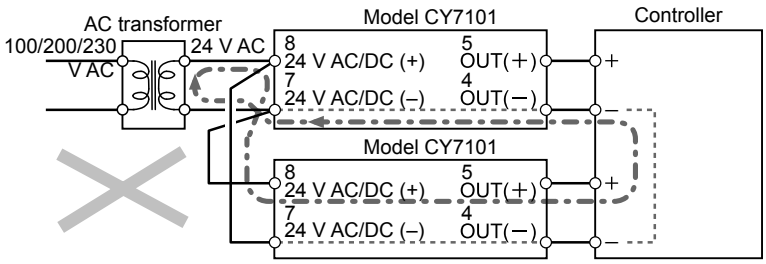

Figure 18. Example of wrongly wired

■ Operation and LED* indication

Table 2., Output signal (CO_2 concentration) and LED indication, shows relation between the output signals in the operating states and LED indications.

Table 2. Output signal (CO_2 concentration) and LED indication

Item	Output signal (CO_2 concentration)	LED indication
Initializing	Approx. 1 V	ON
Operating normally	1–5 V	OFF
Zero gas calibration	Value before calibration	Blinking
Error	Approx. 0.5V	ON

When an error occurs, it may be recovered by executing the zero gas calibration.
If the error was not recovered by the zero gas calibration, the product may be faulty.
Please contact one of our sales or service persons.

Note: For the zero gas calibration, refer to ■ *Maintenance*

* LED: light emitting diode

■ Maintenance

IMPORTANT • Do not disassemble this product. Doing so may cause device failure.

The product is inspected as described below.

(1) Regular inspection

The Neosensor detects CO_2 contained in the air that flows into Neosensor.
Check if the cover is clogged and clean it once a year.

⚠CAUTION

After maintenance, reattach the cover. Failure to do so may result in electric shock.

(2) Troubleshooting

If any problem occurs during operation, refer to *Table 3. Troubleshooting,* for corrective actions.

Table 3. Troubleshooting

Problem	Check point	Corrective actions
No output Unstable output	Loose connection or wiring	Redo wiring.
	Disconnected wires	
	Power supply voltage	
	Damaged sensing element	Replace the Neosensor.
Slow response to output	Dust on the cover and main unit.	Remove dust on the cover and the main unit.
Measurement errors	Installation location	Refer to ■ *Installation*.
		Clean the cover and inside box and remove the clogs.
	Error between actual measurement and output value	Execute zero gas calibration.
		Replace the Neosensor.
		Correct the value using the controller (to which the value is input).

● Zero gas calibration

Note that output drift of the sensor is max. ±150 ppm/year when it is continuously energized.
Be sure to execute the zero gas calibration once a year.
To execute the calibration, the CO_2 service bag (separately sold) or CO_2 service cylinder (separately sold) is required.
Refer to *AB-5803, Specifications/Instructions of Zero Calibration Service Bag Part No. 83104511-001.*

IMPORTANT
- As mentioned in ■ *Installation*, if Neosensor has not been energized for a long period, it may cause drift shown in *Table 1. Output drift of the main unit continuously non-energized (reference value).*
  In such a case, the zero calibration must be executed after Neosensor is powered again.
- When Neosensor is powered on after a long period unenergized condition, approx. 10 days are needed to stabilize its output.
  Calibrate it in 10 days after it is powered on.
- Do not directly breathe the nitrogen gas discharged from the service cylinder.
  If you directly breathe the nitrogen gas, oxygen deficiency may be caused.
- If this product is powered off during calibration, it may break down. After calibration is complete, turn off the power.

(1) Remove the front cover from the main unit.
(2) Detach the adapter attached to the rear surface of the cover. Insert the adapter into one of the calibration gas inlets of Neosensor. Either inlet can be used.

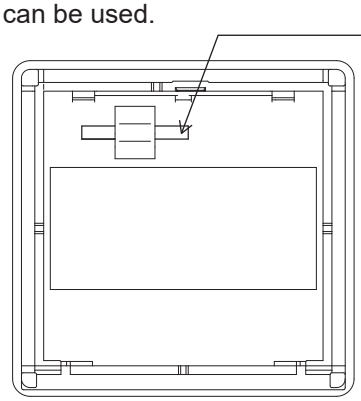

Figure 19. Adapter on the rear surface of cover

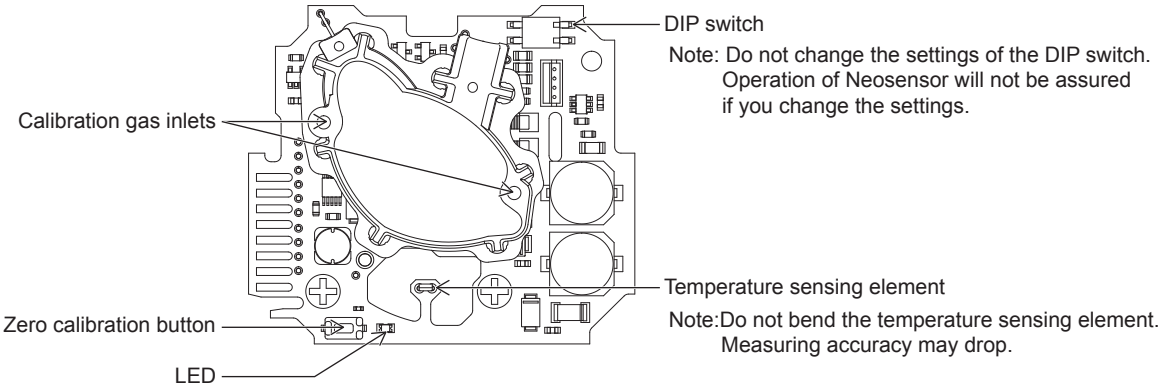

Figure 20. Zero gas concentration button, calibration gas inlets

(3) Connect the tube, for supplying gas, of the zero calibration service bag or service cylinder to the adapter inserted into the calibration gas inlet.
Securely connect the tube so that the gas will not leak.

(4) To calibrate Neosensor using the CO_2 service bag, turn on the switch on the bag to supply the gas.
To calibrate Neosensor using the CO_2 service cylinder, set the HI position of regulator dial to the indication mark (△) to supply the gas.
(5) Press and hold the zero gas calibration button for approx. 3 seconds.
Check that the LED on the PCB blinks.
(6) Continue supplying the gas (for approx. 2 minutes) until CO_2 concentration gets stable.
When calibration is complete, the LED on the PCB turns off.
(7) Remove the gas supplying tube.
(8) Remove the adapter.
Note:Securely keep the gas supplying tube so as not to lose.
It can be used for calibrating other system's sensors.
(9) Reattach the front cover.

■ Disposal

When this product is no longer needed, dispose of it as industrial waste in accordance with local regulations.
Do not reuse all or part of this product.

This product complies with the essential requirements of the Electromagnetic Compatibility Directive (EMCD).
EMCD: EN 61326-1 Class B, Table 1 (for use in a basic electromagnetic environment)

Specifications are subject to change without notice.

Azbil Corporation

Building Systems Company

https://www.azbil.com/

Rev.5.0 Nov. 2023
(J: AI-7286 Rev. 7.0)

AB-7286